THE INFORMATION CONTAINED IN THIS DRAWING IS THE SOLE PROPERTY OF PLASTICASE ANY REPRODUCTION IN PART OR WHOLE WITHOUT THE WRITTEN PERMISSION OF PLASTICASE IS PROHIBITED.

REVISIONS			
REV.	DESCRIPTION	DATE	APPROVED

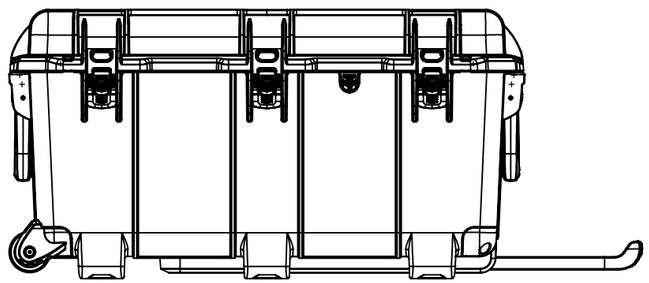

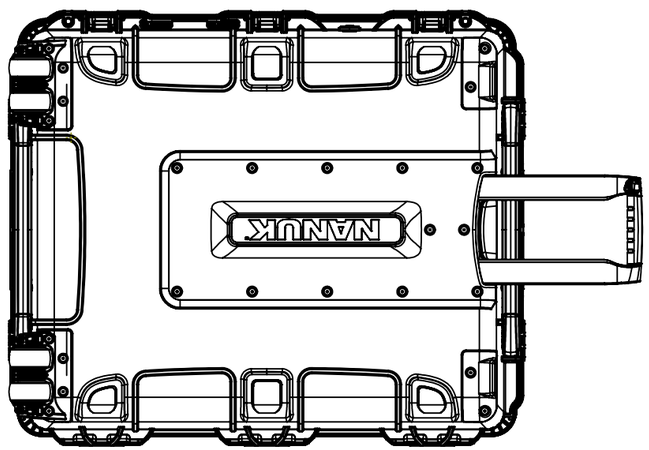

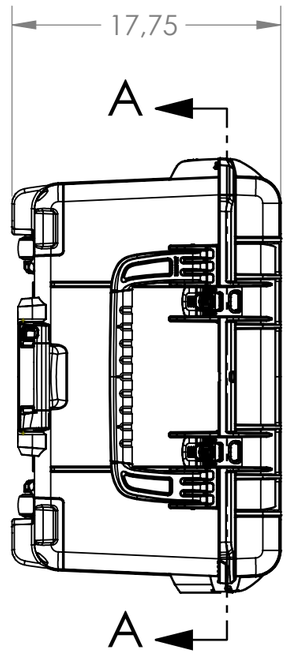

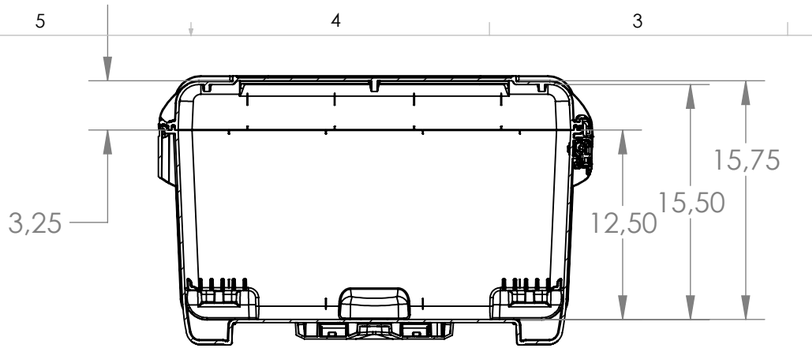

SECTION B-B

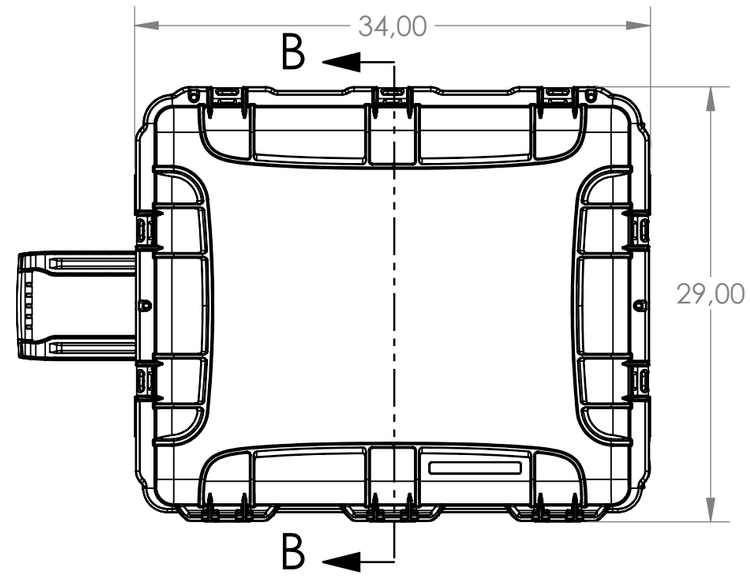

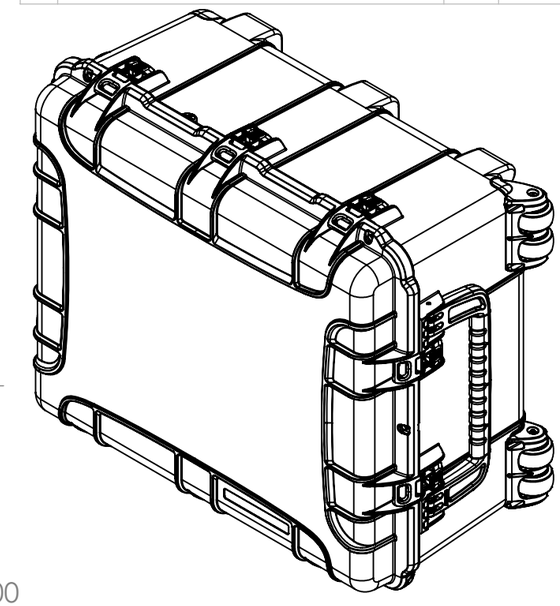

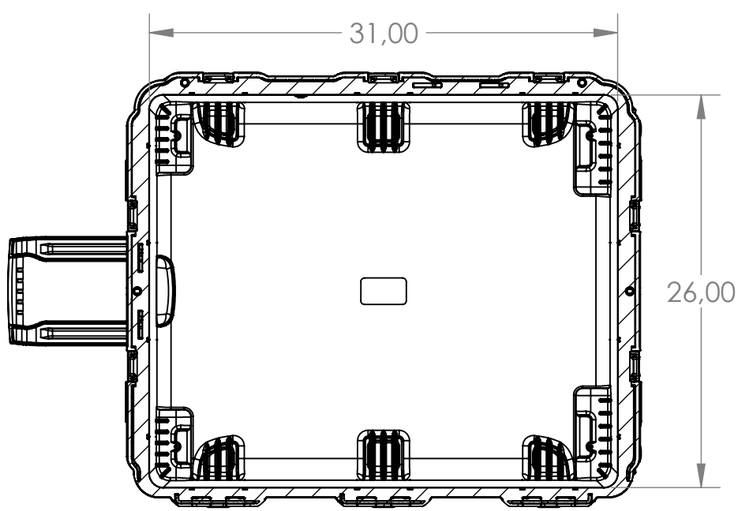

SECTION A-A

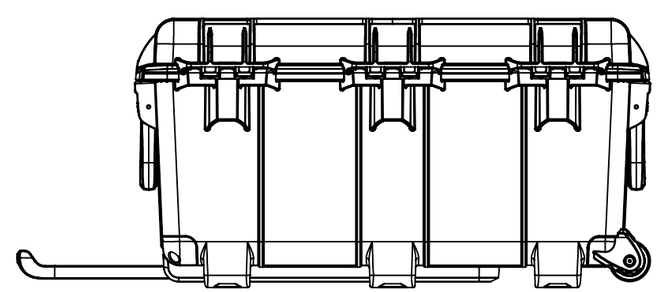

CAD GENERATED DRAWING, DO NOT MANUALLY UPDATE	NANUK GEAR PROTECTION
APPROVALS / DATE	
DRAWN D.B. 2024-08-06	NANUK 976
CHECKED	
RESP ENG	
MFG ENG	SIZE B / DWG. NO. / REV.
QUAL ENG	SCALE 1:10 / CAD FILE: 975_Assembly_a.01 / SHEET 1 OF 1