THE INFORMATION CONTAINED IN THIS DRAWING IS THE SOLE PROPERTY OF PLASTICASE ANY REPRODUCTION IN PART OR WHOLE WITHOUT THE WRITTEN PERMISSION OF PLASTICASE IS PROHIBITED.

REVISIONS			
REV.	DESCRIPTION	DATE	APPROVED

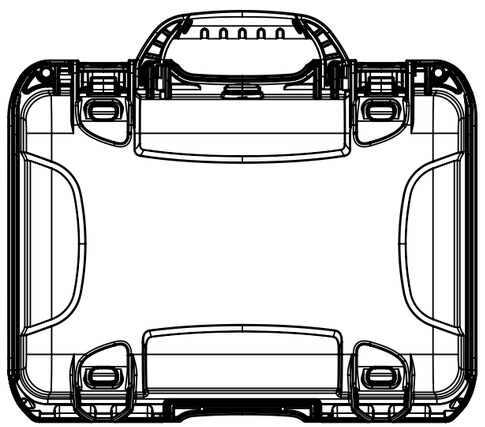

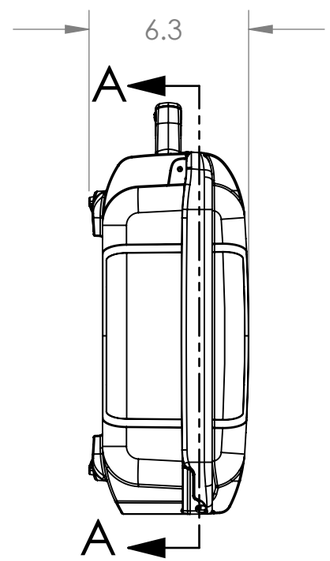

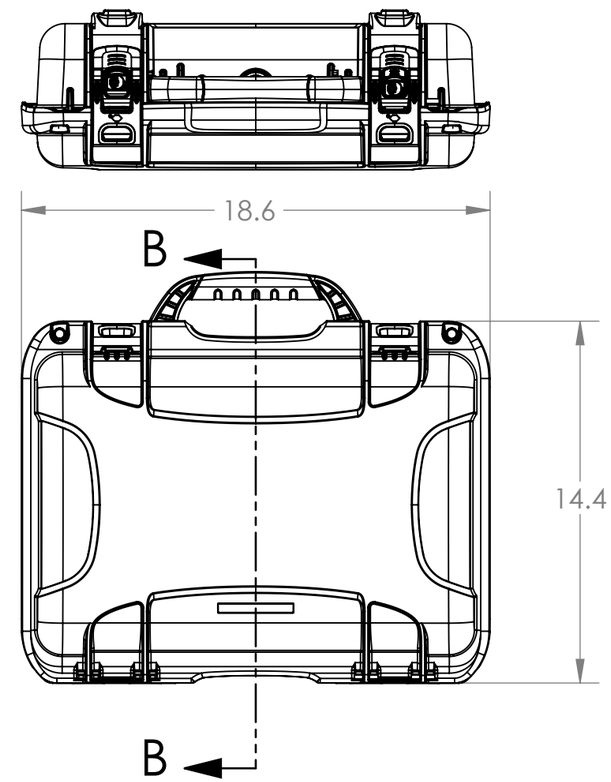

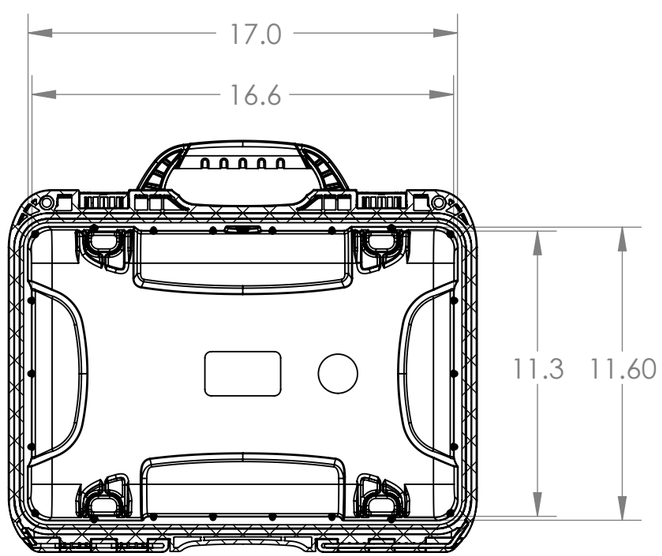

SECTION A-A

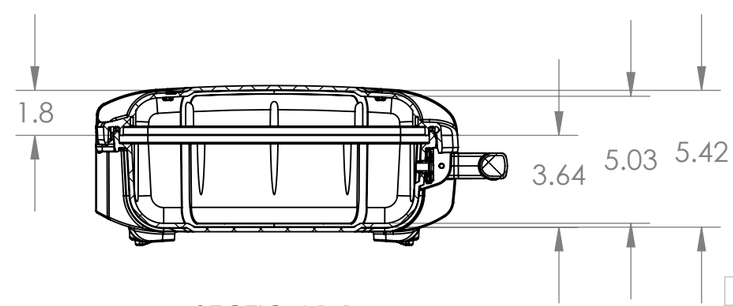

SECTION B-B

NANUK 923 Specifications	
Case Weight Empty	5.9lbs / 2.7kg
Interior Length	16.6" / 422 mm
Interior Width	11.3" / 287 mm
Interior Height	5.4" / 137mm
Interior Lid Depth	1.8" / 46 mm
Interior Base Depth	3.6" / 91 mm
Exterior Length	18.6" / 472 mm
Exterior Width	14.4" / 366 mm
Exterior Height	6.3" / 160 mm
Master Pack Qty.	1
Master Pack Wt.	TBD
Max Buoyancy	TBD

PARTS LIST

UNLESS OTHERWISE SPECIFIED DIMENSIONS ARE IN INCHES

CAD GENERATED DRAWING, DO NOT MANUALLY UPDATE

APPROVALS		DATE
DRAWN	B.C.	03/11/2016
CHECKED		
RESP ENG		
MFG ENG		
QUAL ENG		

MATERIAL

FINISH --

DO NOT SCALE DRAWING

PLASTICASE

NANUK 923

SIZE B | DWG. NO. | REV.

SCALE 1:6 | CAD FILE: 923_Assembly | SHEET 1 OF 1